ITEM NUMBER
4953776

OPTION LIST
AC9254
BR9339
DA9179
EE9174
EH9434
EM9228
FF9475
FH9306
FS9787
HC9196
HX9135
LA9104
LF9093
LG9827
OB9388
OC9082
OP9351
PH98272
PP99014
RG9692
SA9068
ST9272
SW9102
TB91378
VB9022
VC9156
WR9502
XS9372

REVISIONS				
ZONE	REV	DESCRIPTION	DWN	APP'D
	02	23968	MCS-HH493 03AUG19	JRSSS 21AUG19

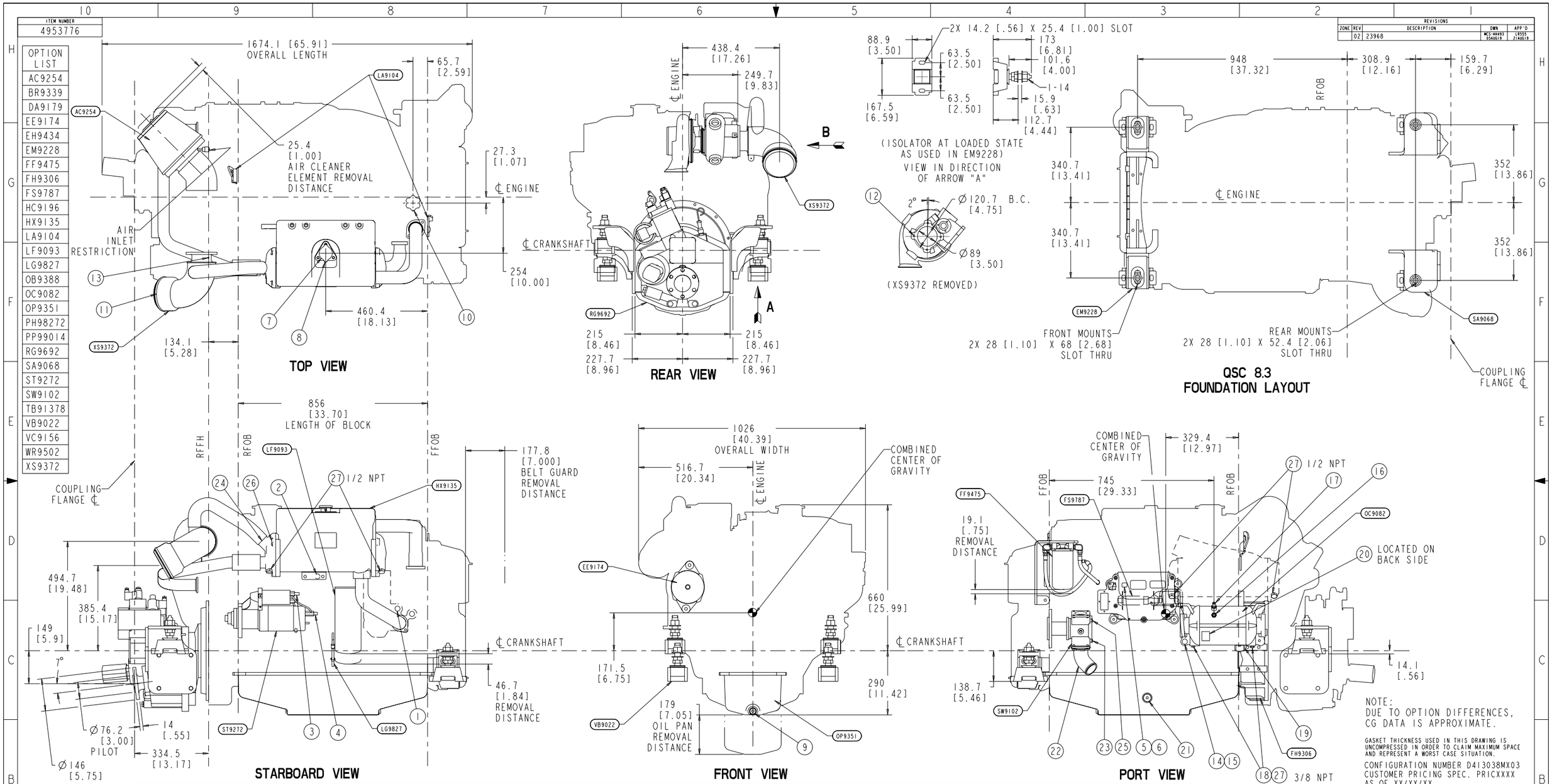

NOTE:
DUE TO OPTION DIFFERENCES, CG DATA IS APPROXIMATE.

GASKET THICKNESS USED IN THIS DRAWING IS UNCOMPRESSED IN ORDER TO CLAIM MAXIMUM SPACE AND REPRESENT A WORST CASE SITUATION.

CONFIGURATION NUMBER D413038MX03
CUSTOMER PRICING SPEC. PRICXXXX
AS OF XX/XX/XX

ENGINE SERVICE TEST PORTS/INSTALLATION CONNECTIONS

1	AUXILIARY HEATER RETURN:	5/8 BARBED	
2	AUXILIARY HEATER SUPPLY:	5/8 BARBED	
3	BATTERY CONNECTION (STARTER) (+):	M12 X 1.75	
4	BATTERY CONNECTION (STARTER) (-):	M12 X 1.75	
5	BATTERY CONNECTION (ECM) (+):	(4) PIN DEUTSCH	
6	BATTERY CONNECTION (ECM) (-):	(4) PIN DEUTSCH	
7	COOLANT FILL:	Ø30 [1.18] O.D.	
8	COOLANT RECOVERY/OVERFLOW CONN.:	Ø9.27 [.36]	
9	ENGINE OIL DRAIN:	M18 X 1.5	
10	ENGINE OIL FILL:	Ø28 [1.10]	
11	EXHAUST OUTLET CONNECTION (ELBOW):	Ø152.4 [6.00]	
12	EXHAUST OUTLET CONNECTION (TURBO):	4X M8 X 1.25↧17.8	
13	EXHAUST TEMP./BACK PRESSURE TEST PORT:	1/8-27 NPT	
14	FUEL INLET CONNECTION:	7/8-14 (45°-#10)	
15	FUEL INLET TEST PORT:	TEE OFF INLET CONN.	
16	FUEL RETURN TO TANK CONNECTION:	3/4-16 (45°-#8)	
17	FUEL RETURN TEST PORT:	1/2" COUPLING NIPPLE	
18	GEAR OIL COOLER DRAIN:	2X 3/8-18 NPT (BOTTOM)	
19	GEAR OIL COOLER INLET:	M22 X 1.5	
20	GEAR OIL COOLER OUTLET:	M22 X 1.5	
21	OIL HEATER CONNECTION:	M22 X 1.5	
22	SEA WATER INLET:	Ø63.5 [2.50] O.D.	
23	SEA WATER INLET TEST PORT:	1/4-18 NPT	
24	SEA WATER OUTLET:	Ø50.8 [2.00] O.D.	
25	SEA WATER OUTLET TEST PORT:	1/4-18 NPT	
26	SHAFT LOG SEA WATER SUPPLY:	1/8-27 NPT (TOP)	
27	ZINC ANODE:	4X 1/2 NPT, 2X 3/8 NPT	

NOTE:
ZINC ANODE REMOVAL DISTANCE = 57.2 [2.25]

DO NOT SCALE THIS DRAWING

THIS DRAWING/DATA FILE (AND THE INFORMATION SHOWN THEREON) IS CONFIDENTIAL AND PROPRIETARY AND SHALL NOT BE USED, DISCLOSED TO OTHERS, OR REPRODUCED BY ANY MEANS FOR ANY PURPOSE IN HARD COPY FORM OR IN MACHINE READABLE FILES, WITHOUT WRITTEN CONSENT OF CUMMINS INC., MARKETING CAD SERVICES DEPARTMENT.

PRODUCT GRAPHICS FILE
NO ORIGINAL DRAWING EXISTS FOR THIS ITEM. THE ENGINEERING GRAPHICS DATA FOR THIS ITEM RESIDES IN THE PRODUCT GRAPHICS FILE AND IS CONTROLLED BY THE AGENCY DESIGNATED AS HAVING ITEM CONTROL.

LAST SECTION LETTER USED:
REF. DRAWING STANDARDS: ANSI Y14.5M ISO R128I
UNLESS OTHERWISE SPECIFIED DIMENSIONS ARE IN: MILLIMETERS
T J ARE IN: INCHES

CUMMINS INC.

ITEM NAME: QSC 8.3-HX W/ ZF286A SAE3
IDENTIFIER: INSTALLATION DIAGRAM

DWN	D.SOMIN	14FEB97	SIZE J
CHD	MCS-HH493	04AUG19	CODE IDENT. NO.
APPD			ITEM NUMBER 4953776
APPD			SCALE: 2:9 ITEM CONTROL: MCS SHEET 1 OF 1

THIRD ANGLE PROJECTION