ITEM NUMBER
3170725

REVISIONS				
ZONE	REV	DESCRIPTION	DWN	APP'D
	00	QSC 8.3 500-HX W/ZF280A	TMG 4-22-05	

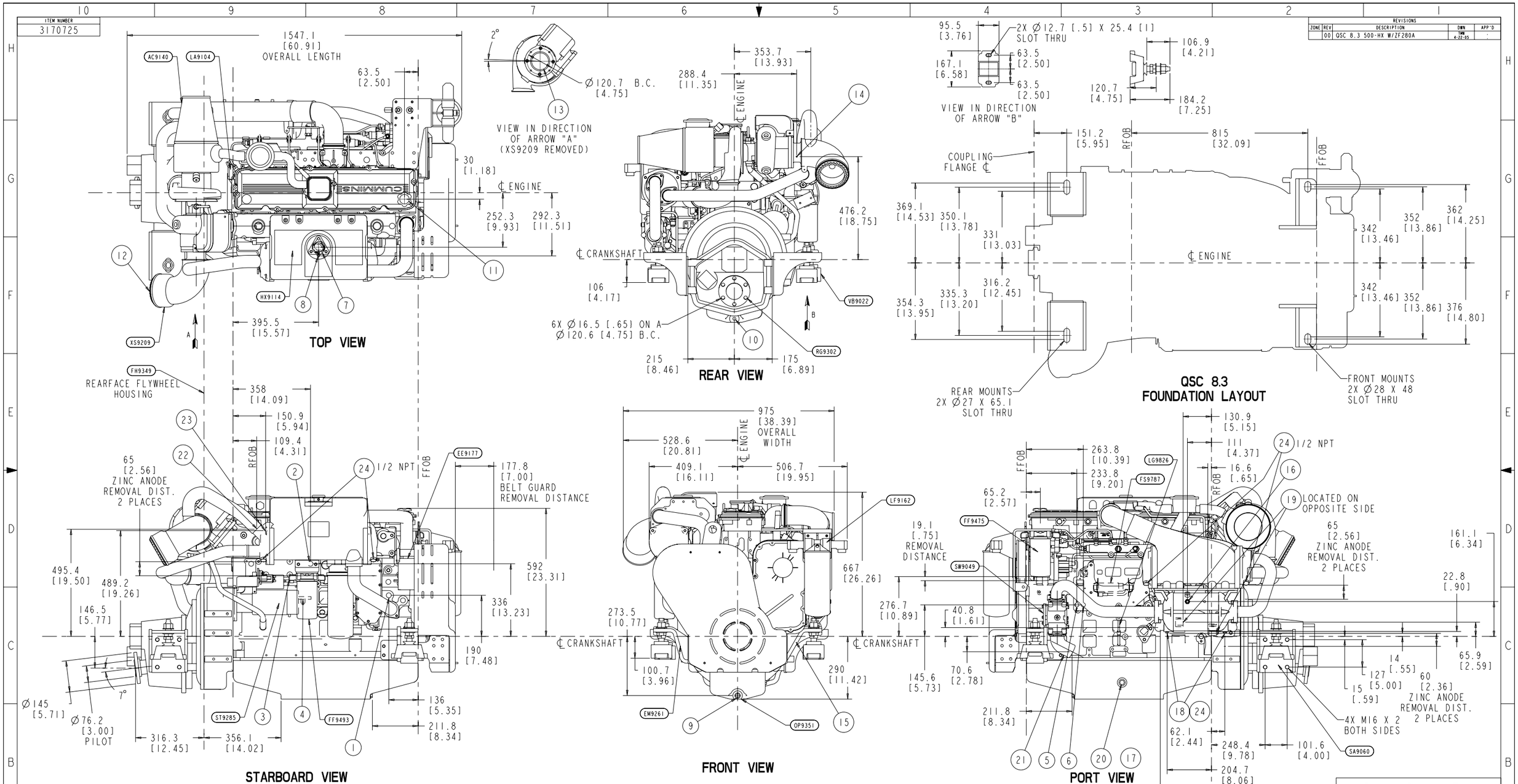

ENGINE SERVICE TEST PORTS/INSTALLATION CONNECTIONS

1	AUXILIARY HEATER RETURN:	3/4 NPT	9	ENGINE OIL DRAIN FRONT:	M18 X 1.5	17	FUEL INLET CONNECTION	7/8-14 UN, 45° FLARE (SAE #10)
2	AUXILIARY HEATER SUPPLY:	3/4 NPT w/ ORIFICE	10	ENGINE OIL DRAIN REAR:	9/16-18 UN	18	GEAR OIL COOLER DRAIN:	3/8 NPT
3	BATTERY CONNECTION (STARTER) (+):	M12 X 1.75	11	ENGINE OIL FILL:	Ø38 [1.5]	19	GEAR OIL COOLER INLET AND OUTLET:	1/2 NPT
4	BATTERY CONNECTION (STARTER) (-):	M12 X 1.75	12	EXHAUST OUTLET CONNECTION (ELBOW):	Ø152.4 [6.00] O.D.	20	OIL HEATER CONNECTION:	M22 X 1.5
5	BATTERY CONNECTION (ECM) (+):	1/4-20 UN	13	EXHAUST OUTLET CONNECTION (TURBO):	Ø66 [2.60] I.D.	21	SEA WATER INLET:	Ø63.5 [2.50]
6	BATTERY CONNECTION (ECM) (-):	1/4-20 UN	14	EXHAUST TEMPERATURE/BACK PRESSURE:	1/8 NPT	22	SEA WATER OUTLET:	Ø50.8 [2.00]
7	COOLANT FILL:	Ø30 [1.18]	15	FRONT ENGINE SUPPORT:	2X Ø27 [1.06] X 63 [2.48] SLOT	23	SHAFT LOG SEA WATER SUPPLY:	1/4 NPT
8	COOLANT RECOVERY/OVERFLOW CONNECTION:	Ø8.39 [.33]	16	FUEL RETURN TO TANK CONNECTION:	3/4-16 UN, 45° FLARE (SAE #8)	24	ZINC ANODE:	4X 1/2 NPT, 2X 3/8 NPT

PRODUCT GRAPHICS FILE
NO ORIGINAL DRAWING EXISTS FOR THIS ITEM. THE ENGINEERING GRAPHICS DATA FOR THIS ITEM RESIDES IN THE PRODUCT GRAPHICS FILE AND IS CONTROLLED BY THE AGENCY DESIGNATED AS HAVING ITEM CONTROL.

DO NOT SCALE THIS DRAWING

THIS DRAWING/DATA FILE (AND THE INFORMATION SHOWN THEREON) IS CONFIDENTIAL AND PROPRIETARY AND SHALL NOT BE USED, DISCLOSED TO OTHERS, OR REPRODUCED BY ANY MEANS FOR ANY PURPOSE IN HARD COPY FORM OR IN MACHINE READABLE FILES, WITHOUT WRITTEN CONSENT OF CUMMINS INC., MARKETING CAD SERVICES DEPARTMENT.

LAST SECTION LETTER USED: A
REF. DRAWING STANDARDS: ANSI Y14.5M ISO R1101
UNLESS OTHERWISE SPECIFIED DIMENSIONS ARE IN: MILLIMETERS
[ ] ARE IN: INCHES

CUMMINS INC.

ITEM NAME: QSC 8.3 500-HX W/ZF280A
IDENTIFIER: INSTALLATION DIAGRAM

DWN	TMOLFGANG	4-22-05
CHD	UNCHECKED	
APPD		
APPD		

SIZE: J
CODE IDENT. NO.:
ITEM NUMBER: 3170725
SCALE: .20
ITEM CONTROL: MCS
SHEET 1 OF 1