ITEM NUMBER
4953780

OPTION LIST
AC9254
BR9339
DA9179
EE9174
EH9434
EM9228
FF9475
FH9306
FW9959
HC9083
HX9135
LA9104
LF9093
LG9827
OC9082
OP9351
RG9537
SA9051
ST9272
SW9061
TB91378
VB9022
VC9156
XS9372

REVISIONS				
ZONE	REV	DESCRIPTION	DWN	APP'D
	02	QSC 8.3-HX W/ ZF2861V REVISION	TP12X JPH 21SEP15	CQS31 RB 21SEP15

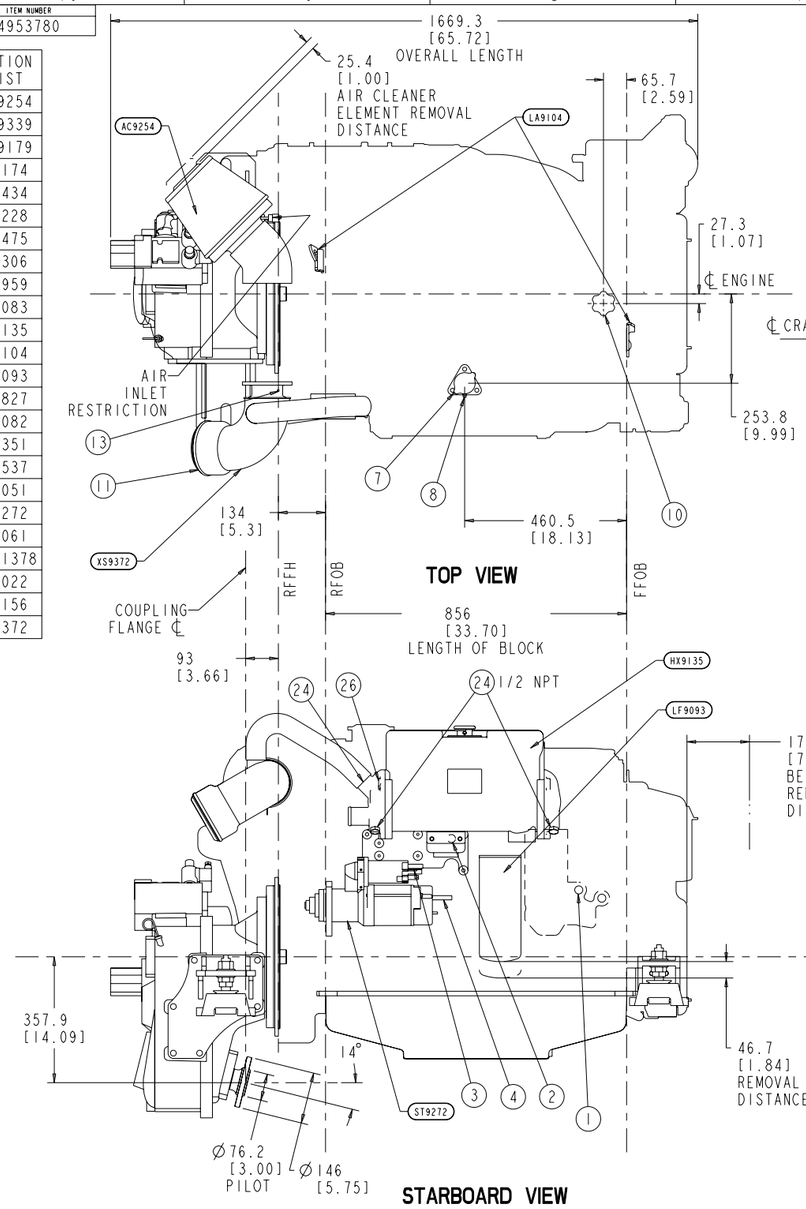

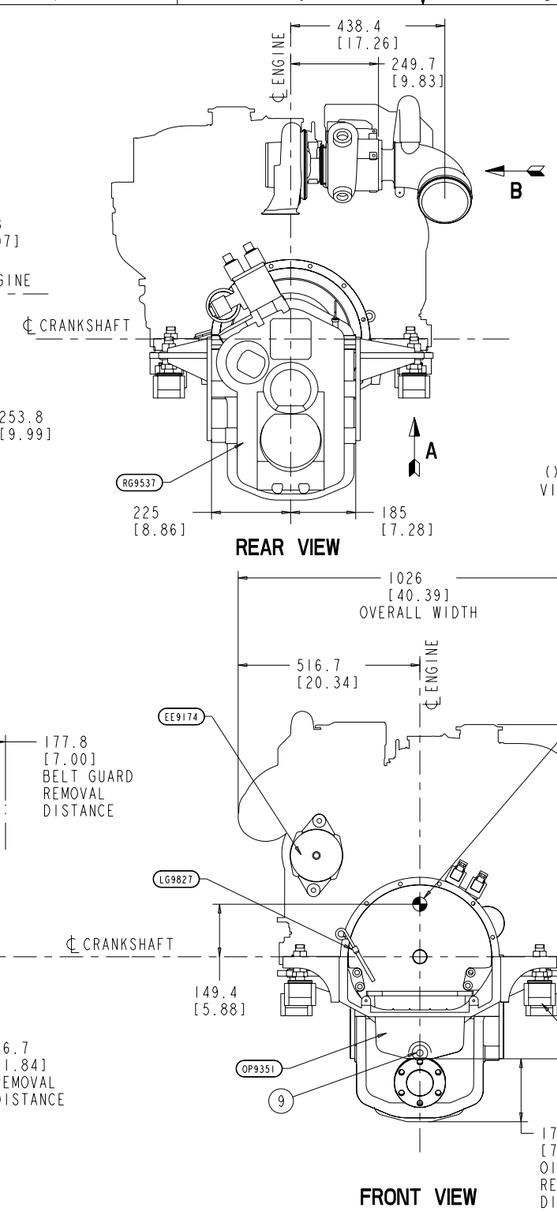

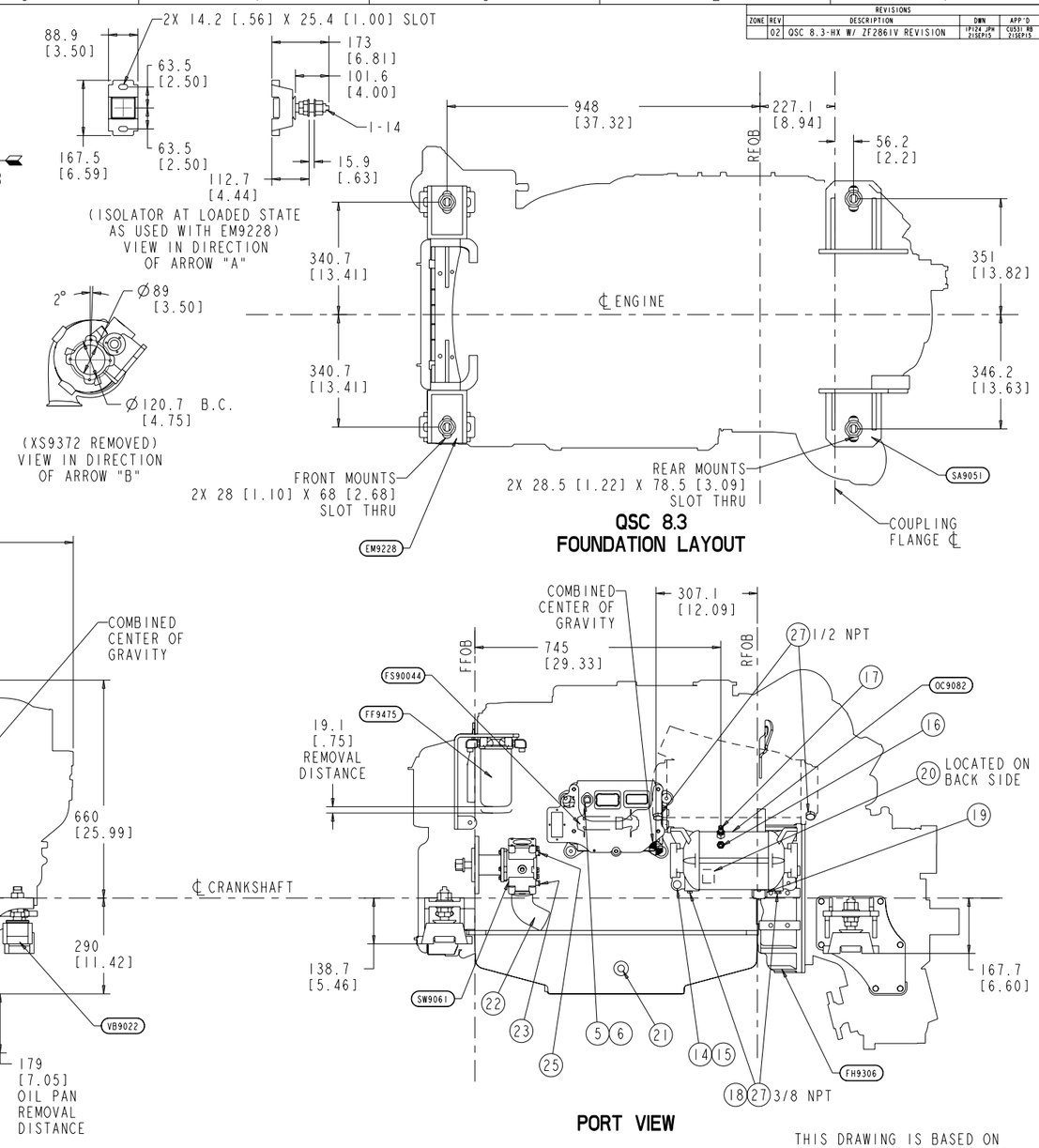

ENGINE SERVICE TEST PORTS/INSTALLATION CONNECTIONS

1	AUXILIARY HEATER RETURN:	5/8 BARBED	10	ENGINE OIL FILL:	Ø28 [1.10]	19	GEAR OIL COOLER INLET:	M22 X 1.5
2	AUXILIARY HEATER SUPPLY:	5/8 BARBED	11	EXHAUST OUTLET CONNECTION (ELBOW):	Ø152.4 [6.00]	20	GEAR OIL COOLER OUTLET:	M22 X 1.5
3	BATTERY CONNECTION (STARTER) (+):	M12 X 1.75	12	EXHAUST OUTLET CONNECTION (TURBO):	4X M8 X 1.25↧17.8	21	OIL HEATER CONNECTION:	M22 X 1.5
4	BATTERY CONNECTION (STARTER) (-):	M12 X 1.75	13	EXHAUST TEMP./BACK PRESSURE TEST PORT:	1/8-27 NPT	22	SEA WATER INLET:	Ø63.5 [2.5] O.D.
5	BATTERY CONNECTION (ECM) (+):	(4) PIN DEUTSCH	14	FUEL INLET CONNECTION:	7/8-14 (45°-#10)	23	SEA WATER INLET TEST PORT:	1/4-18 NPT
6	BATTERY CONNECTION (ECM) (-):	(4) PIN DEUTSCH	15	FUEL INLET TEST PORT:	TEE OFF INLET CONN.	24	SEA WATER OUTLET:	Ø50.8 [2.0] O.D.
7	COOLANT FILL:	Ø30 [1.18] O.D.	16	FUEL RETURN TO TANK CONNECTION:	3/4-16 (45° -#8)	25	SEA WATER OUTLET TEST PORT:	1/4-18 NPT
8	COOLANT RECOVERY/OVERFLOW CONN.:	Ø9.27 [.36]	17	FUEL RETURN TEST PORT:	1/2" COUPLING NIPPLE	26	SHAFT LOG SEA WATER SUPPLY:	1/8-27 NPT (TOP)
9	ENGINE OIL DRAIN:	2X M18 X 1.5	18	GEAR OIL COOLER DRAIN:	2X 3/8-18 NPT (BOTTOM)	27	ZINC ANODE:	4X 1/2 NPT, 2 X 3/8 NPT

NOTE:
1. ZINC ANODE REMOVAL DISTANCE = 57.2 [2.25]
2. DUE TO OPTION DIFFERENCES, CG DATA IS APPROXIMATE.

THIS DRAWING IS BASED ON CONFIGURATION D413038MX03

PRODUCT GRAPHICS FILE
NO ORIGINAL DRAWING EXISTS FOR THIS ITEM. THE ENGINEERING GRAPHICS DATA FOR THIS ITEM RESIDES IN THE PRODUCT GRAPHICS FILE AND IS CONTROLLED BY THE AGENCY DESIGNATED AS HAVING ITEM CONTROL.

DO NOT SCALE THIS DRAWING

THIS DRAWING/DATA FILE (AND THE INFORMATION SHOWN THEREON) IS CONFIDENTIAL AND PROPRIETARY AND SHALL NOT BE USED, DISCLOSED TO OTHERS, OR REPRODUCED BY ANY MEANS FOR ANY PURPOSE IN HARD COPY FORM OR IN MACHINE READABLE FILES, WITHOUT WRITTEN CONSENT OF CUMMINS INC., MARKETING CAD SERVICES DEPARTMENT.

UNLESS OTHERWISE SPECIFIED DIMENSIONS ARE IN: MILLIMETERS
T'S ARE IN: INCHES

LAST SECTION LETTER USED: NA
REF. DRAWING STANDARDS: ANSI Y14.5M ISO R1101

CUMMINS INC.

ITEM NAME: QSC 8.3-HX W/ ZF2861V SAE 3
IDENTIFIER: INSTALLATION DIAGRAM

DWN	D.SOMIN	8-24-04
CHD	UNCHECKED	
APPD		
APPD		

SIZE: J | CODE IDENT. NO.: | ITEM NUMBER: 4953780
SCALE: .20 | ITEM CONTROL: MCS | SHEET 1 OF 1