ITEM NUMBER
4360965

OPTIONS LIST
AC9457
BR9655
EE9175
EM9428
FF90705
FH90081
FW9958
HX9159
LA9260
LF9210
LG90767
OC9142
OP9890
PH9940
RE9160
RG9313
ST9487
SW9098
TB92523
VB9050
WI9599
XS9313

REVISIONS				
ZONE	REV	DESCRIPTION	DWN	APP'D
	00	RELEASED	JPH 04NOV15	RB 04NOV15

NOTE:
1. DUE TO OPTION DIFFERENCES, CG DATA IS APPROXIMATE AND INCLUSIVE OF GEAR.
2. THIS DRAWING DEPICTS SL MOUNTS

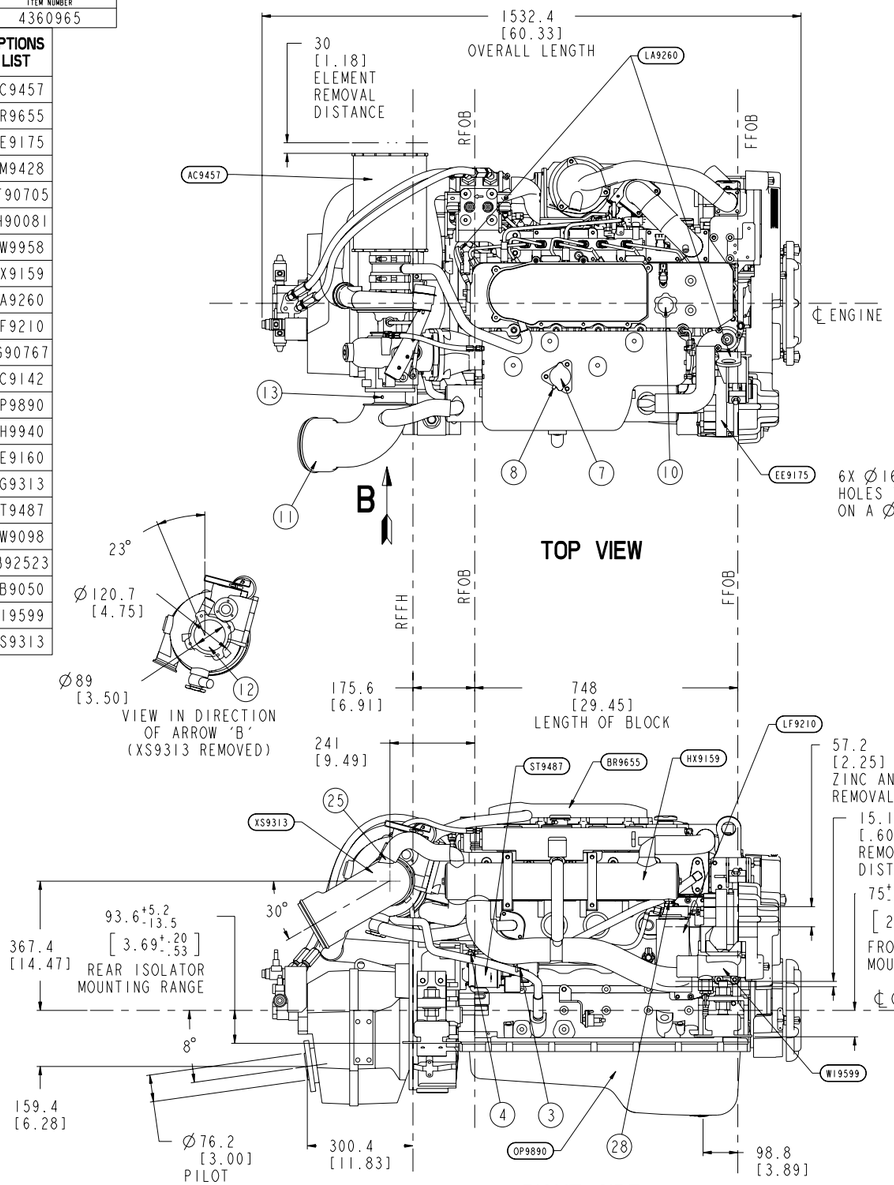

TOP VIEW

RIGHT SIDE

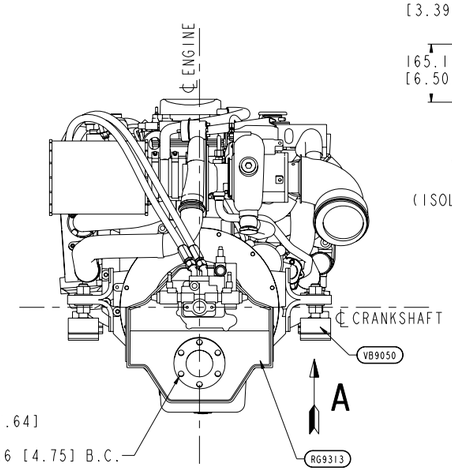

REAR VIEW

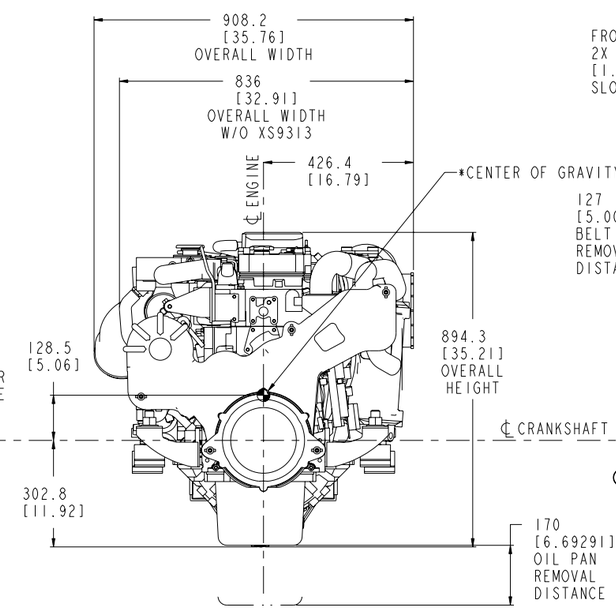

FRONT VIEW

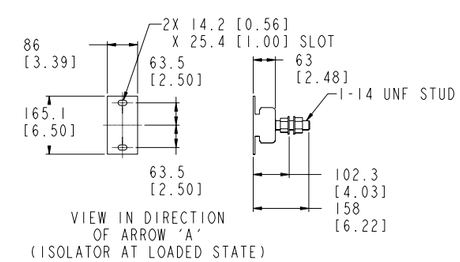

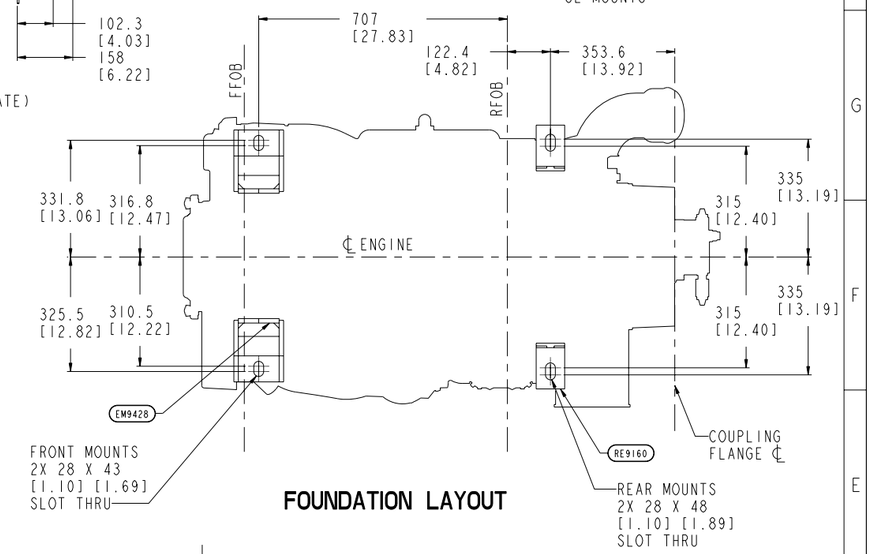

FOUNDATION LAYOUT

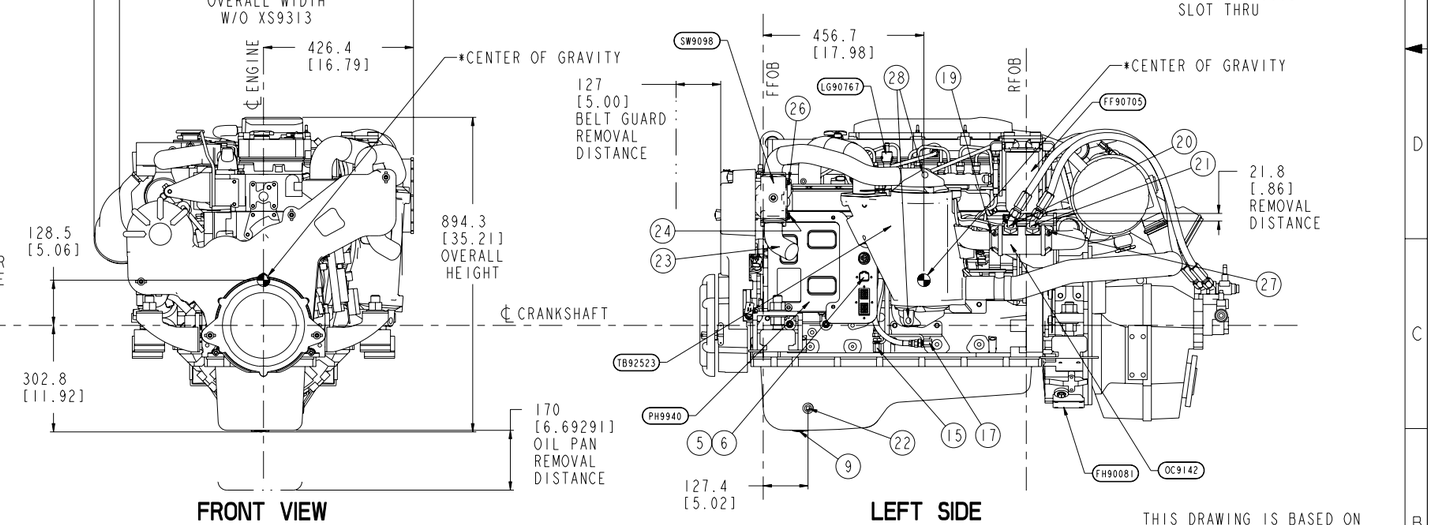

LEFT SIDE

ENGINE SERVICE TEST PORTS/INSTALLATION CONNECTIONS

1	AUXILIARY HEATER RETURN:	N/A	11	EXHAUST OUTLET CONNECTION (ELBOW):	Ø152.4 [6.00] O.D.	21	GEAR OIL COOLER OUTLET:	3/4-16 STOR
2	AUXILIARY HEATER SUPPLY:	N/A	12	EXHAUST OUTLET CONNECTION (TURBO):	4X M8 X 1.25 ↧ 17.8	22	OIL HEATER CONNECTION:	M22 X 1.5
3	BATTERY CONNECTION (STARTER) (+):	M10 X 1.5	13	EXHAUST TEMP. /BACK PRESSURE TEST PORT:	1/4-18 NPT	23	SEA WATER INLET:	Ø50.8 [2.00] O.D.
4	BATTERY CONNECTION (STARTER) (-):	M10 X 1.5	14	EXHAUST TEMP./SW FLOW SENSOR	N/A	24	SEA WATER INLET TEST PORT:	1/4-18 NPT
5	BATTERY CONNECTION (ECM) (+):	4 PIN CONNECTOR	15	FUEL INLET CONNECTION:	7/8-14 (STOR FEMALE)	25	SEA WATER OUTLET:	Ø38.1 [1.5] O.D.
6	BATTERY CONNECTION (ECM) (-):	4 PIN CONNECTOR	16	FUEL INLET TEST PORT:	TEE OFF INLET CONN.	26	SEA WATER OUTLET TEST PORT:	1/4-18 NPT
7	COOLANT FILL:	Ø28.4 [1.12]	17	FUEL RETURN TO TANK CONNECTION:	3/4-16 (STOR FEMALE)	27	SHAFT LOG SEA WATER SUPPLY:	1/8 NPT
8	COOLANT OVERFLOW TUBE:	9.27 I.D. [.36]	18	FUEL RETURN TEST PORT:	TEE OFF RETURN CONN.	28	ZINC ANODE:	4X 1/2-14 NPT
9	ENGINE OIL DRAIN:	M22 X 1.5	19	GEAR OIL COOLER DRAIN:	1/8 NPT			
10	ENGINE OIL FILL:	Ø29.8 [1.17]	20	GEAR OIL COOLER INLET:	3/4-16 STOR			

THIRD ANGLE PROJECTION

THIS DRAWING IS BASED ON CONFIGURATION D31301IMX03

PRODUCT GRAPHICS FILE
NO ORIGINAL DRAWING EXISTS FOR THIS ITEM. THE ENGINEERING GRAPHICS DATA FOR THIS ITEM RESIDES IN THE PRODUCT GRAPHICS FILE AND IS CONTROLLED BY THE AGENCY DESIGNATED AS HAVING ITEM CONTROL.

DO NOT SCALE THIS DRAWING

THIS DRAWING/DATA FILE (AND THE INFORMATION SHOWN THEREON) IS CONFIDENTIAL AND PROPRIETARY AND SHALL NOT BE USED, DISCLOSED TO OTHERS, OR REPRODUCED BY ANY MEANS FOR ANY PURPOSE IN HARD COPY FORM OR IN MACHINE READABLE FILES, WITHOUT WRITTEN CONSENT OF CUMMINS INC., MARKETING CAD SERVICES DEPARTMENT.

LAST SECTION LETTER USED: :
REF. DRAWING STANDARDS: ANSI Y14.5M ISO R1101
UNLESS OTHERWISE SPECIFIED DIMENSIONS ARE IN: MILLIMETERS [ ] ARE IN: INCHES

CUMMINS INC.

ITEM NAME: QSB SL W/ZF85A, A MOUNTS
IDENTIFIER: INSTALLATION DIAGRAM

DWN	JPH	04NOV15	SIZE J	CODE IDENT. NO.	ITEM NUMBER 4360965
CHD	UNCHECKED	04NOV15			
APPD	RB	04NOV15			
APPD			SCALE: N/A	ITEM CONTROL: MCS	SHEET 1 OF 1