ITEM NUMBER
4953999

OPTIONS LIST
AC9312
BR9415
EE9177
EM9388
FF90375
FH9971
FW9958
HX9146
LA9260
LF9255
LG90135
OC9118
OP9464
PH9386
RG9313
SA9086
ST9487
SW9080
TB92005
VB9050
WI9449
XS9372

REVISIONS				
ZONE	REV	DESCRIPTION	DWN	APP'D
	03	REVISED	JPH 03-07-13	

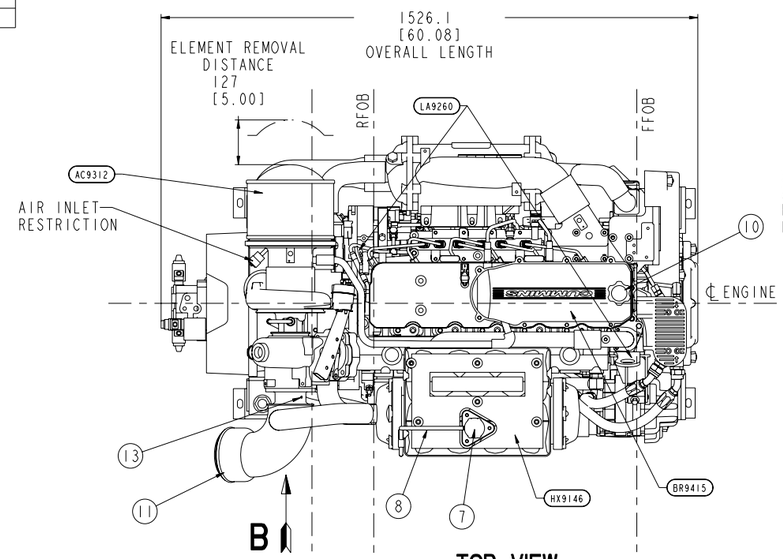

TOP VIEW

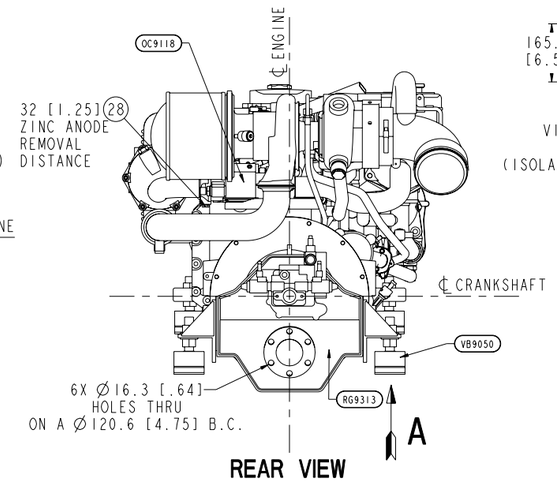

REAR VIEW

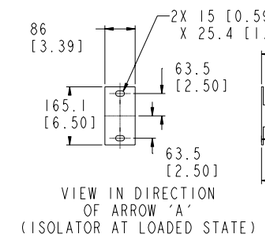

VIEW IN DIRECTION OF ARROW 'A' (ISOLATOR AT LOADED STATE)

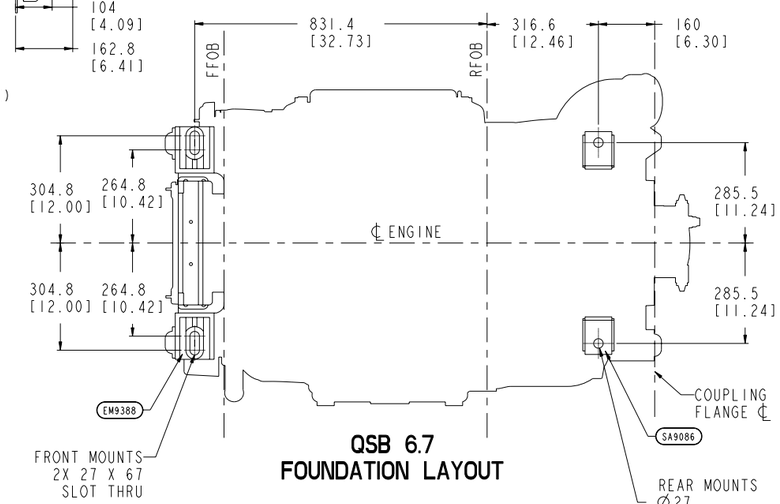

QSB 6.7
FOUNDATION LAYOUT

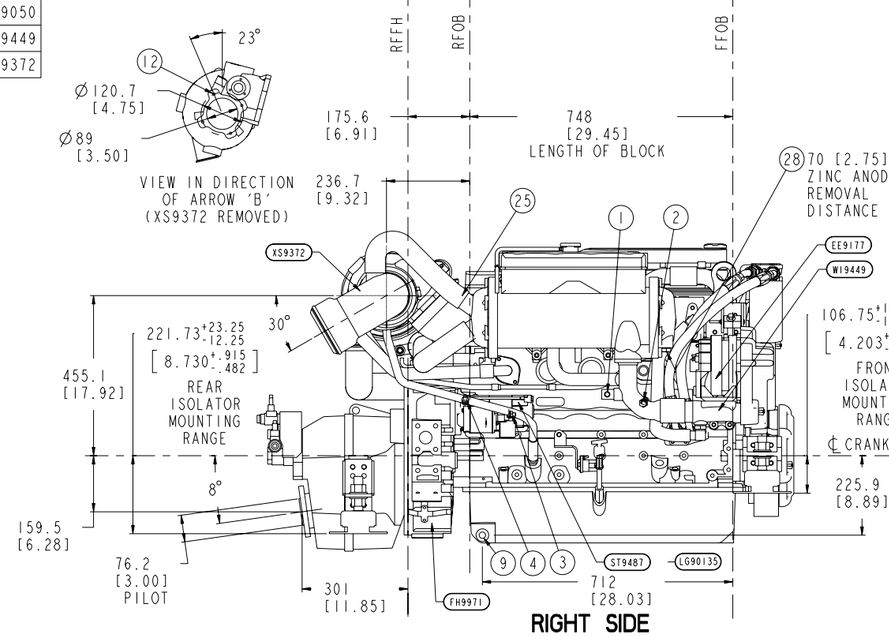

RIGHT SIDE

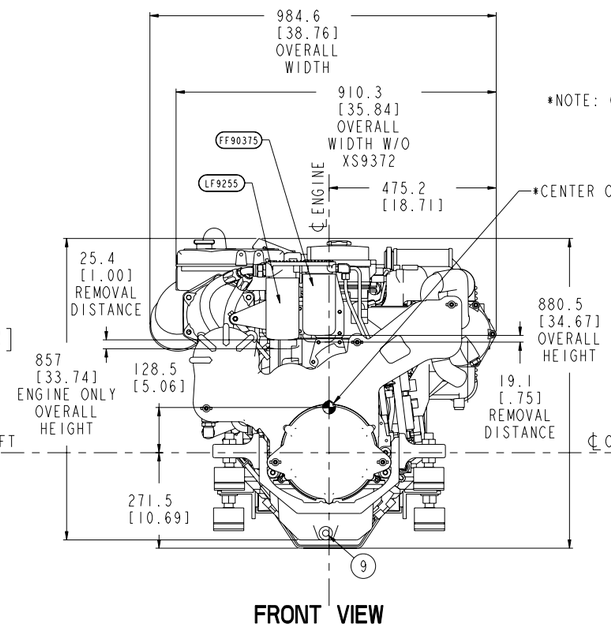

FRONT VIEW

*NOTE: CENTER OF GRAVITY INCLUDES GEAR.

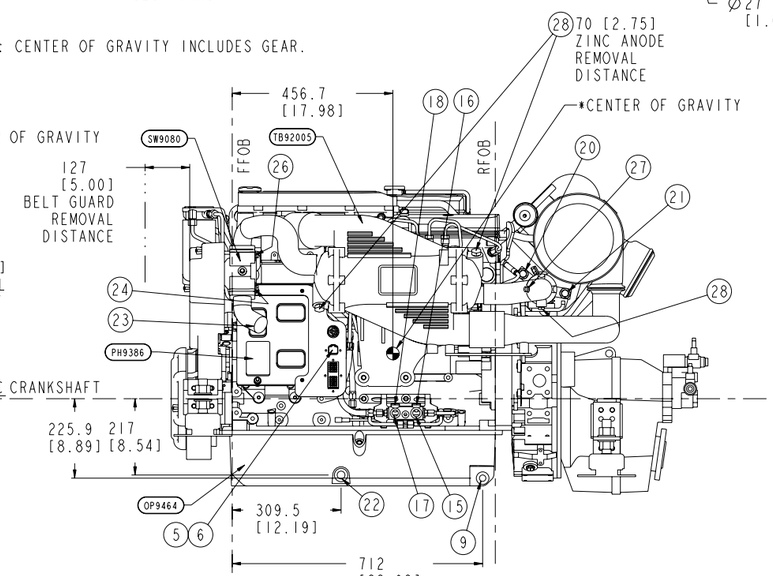

LEFT SIDE

ENGINE SERVICE TEST PORTS/INSTALLATION CONNECTIONS

1	AUXILIARY HEATER RETURN:	5/8 BARBED
2	AUXILIARY HEATER SUPPLY:	5/8 BARBED
3	BATTERY CONNECTION (STARTER) (+):	M10 X 1.5
4	BATTERY CONNECTION (STARTER) (-):	M10 X 1.5
5	BATTERY CONNECTION (ECM) (+):	4 PIN CONNECTOR
6	BATTERY CONNECTION (ECM) (-):	4 PIN CONNECTOR
7	COOLANT FILL:	Ø31.2 [1.23]
8	COOLANT OVERFLOW TUBE:	7.9 I.D. [.31]
9	ENGINE OIL DRAIN:	M18 X 1.5
10	ENGINE OIL FILL:	Ø32.1 [1.27]
11	EXHAUST OUTLET CONNECTION (ELBOW):	Ø152.4 [6.00] O.D.
12	EXHAUST OUTLET CONNECTION (TURBO):	4X M8 X 1.25 ↧ 17.8
13	EXHAUST TEMP. /BACK PRESSURE TEST PORT:	1/4-18 NPT
14	EXHAUST TEMP./SW FLOW SENSOR	N/A
15	FUEL INLET CONNECTION:	7/8-14 (STOR FEMALE)
16	FUEL INLET TEST PORT:	M10 X 1.0
17	FUEL RETURN TO TANK CONNECTION:	3/4-16 (STOR FEMALE)
18	FUEL RETURN TEST PORT:	M10 X 1.0
19	GEAR OIL COOLER DRAIN:	3/8 NPT
20	GEAR OIL COOLER INLET:	M22 X 1.5
21	GEAR OIL COOLER OUTLET:	M22 X 1.5
22	OIL HEATER CONNECTION:	M22 X 1.5
23	SEA WATER INLET:	Ø50.8 [2.00] O.D.
24	SEA WATER INLET TEST PORT:	1/4-18 NPT
25	SEA WATER OUTLET:	Ø50.8 [2.00] O.D.
26	SEA WATER OUTLET TEST PORT:	1/4-18 NPT
27	SHAFT LOG SEA WATER SUPPLY:	1/4 NPT
28	ZINC ANODE:	4X 1/2-14 NPT 3/8-18 NPT (OIL COOLER)

THIRD ANGLE PROJECTION

DO NOT SCALE THIS DRAWING

THIS DRAWING/DATA FILE (AND THE INFORMATION SHOWN THEREON) IS CONFIDENTIAL AND PROPRIETARY AND SHALL NOT BE USED, DISCLOSED TO OTHERS, OR REPRODUCED BY ANY MEANS FOR ANY PURPOSE IN HARD COPY FORM OR IN MACHINE READABLE FILES, WITHOUT WRITTEN CONSENT OF CUMMINS INC., MARKETING CAD SERVICES DEPARTMENT.

PRODUCT GRAPHICS FILE
NO ORIGINAL DRAWING EXISTS FOR THIS ITEM. THE ENGINEERING GRAPHICS DATA FOR THIS ITEM RESIDES IN THE PRODUCT GRAPHICS FILE AND IS CONTROLLED BY THE AGENCY DESIGNATED AS HAVING ITEM CONTROL.

LAST SECTION LETTER USED: :
REF. DRAWING STANDARDS: ANSI Y14.5M ISO R128I
UNLESS OTHERWISE SPECIFIED DIMENSIONS ARE IN: MILLIMETERS
T J ARE IN: INCHES

CUMMINS INC.

ITEM NAME: QSB 6.7L W/ ZF 85A
IDENTIFIER: INSTALLATION DIAGRAM

DWN	TWOLFGANG	SIZE	J
CHD	UNCHECKED	CODE IDENT. NO.	
APPD		ITEM NUMBER	4953999
APPD		SCALE: N/A	ITEM CONTROL: MCS SHEET 1 OF 1