Replacing Release	Location	Change description	P/A:	Document variant status
A-40119		SEE ECN	D: 2 . 1 . main	RELEASED
			Date 030403	Modification count

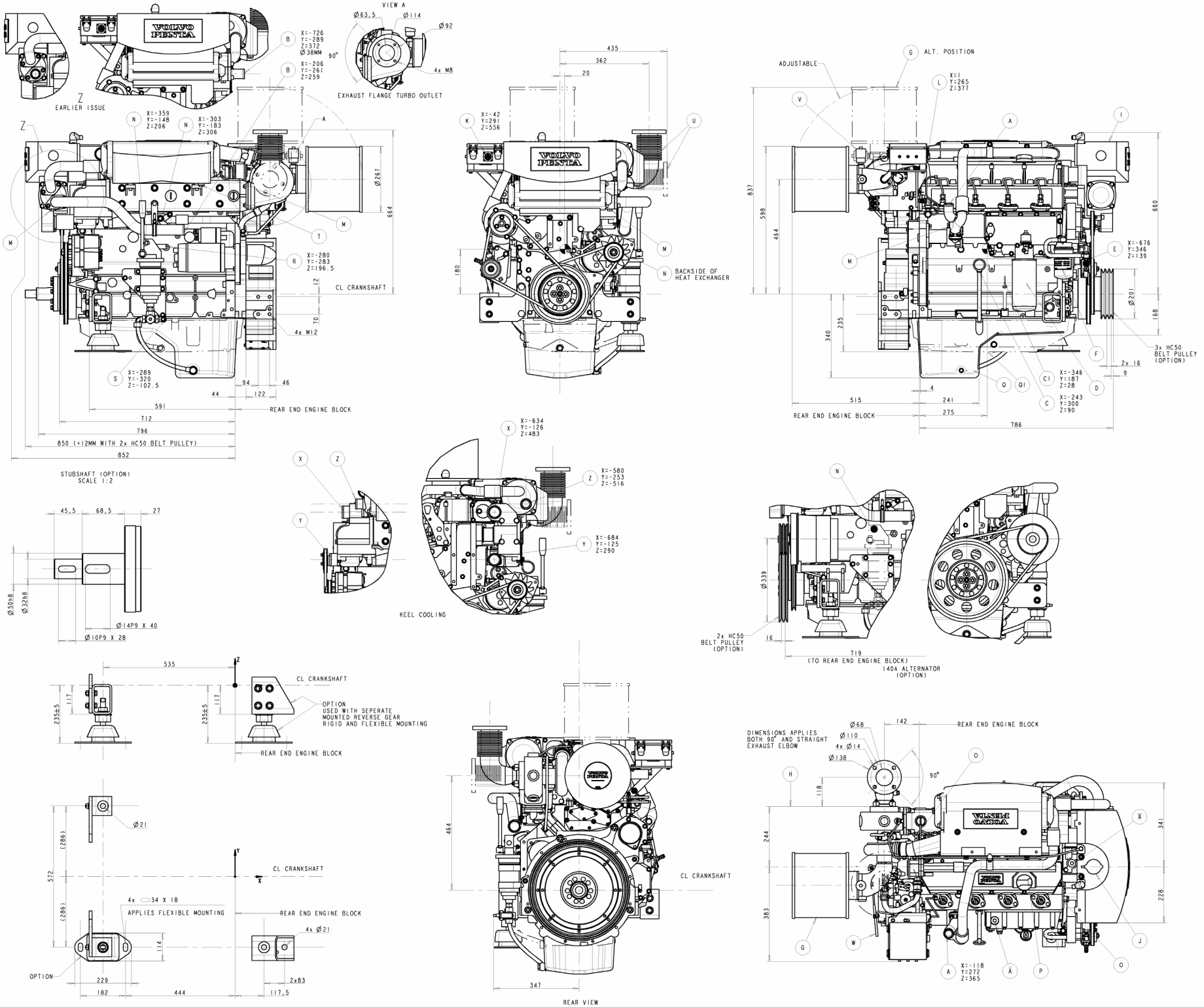

- (A) SEA WATER INLET FOR HOSE CONNECTION Ø38 MM +KEEL COOLED INLET, CHARGED AIR CIRCUIT
- (B) SEA WATER OUTLET FOR HOSE CONNECTION Ø42 MM (END OF 2003)
- (C) DIP STICK, ENGINE, DEEP OIL PAN
- (C1) DIP STICK, ENGINE, SHALLOW OIL PAN
- (D) OIL FILTER
- (E) FUEL INLET FOR HOSE CONNECTION Ø12 MM
- (F) FUEL FILTER
- (G) AIR FILTER
- (H) EXHAUST FLANGE CONNECTION
- (I) HEAT EXCHANGER (OPTION)
- (J) PRESSURE CAP, COOLANT FILLING
- (K) CONNECTION FOR ELECTRIC EXTENSION CABLE
- (L) FUEL RETURN FOR HOSE CONNECTION Ø12 MM
- (M) SEA WATER DRAIN (3x)
- (N) FRESH WATER DRAIN (3x)
- (O) LIFTING EYELITS (2x, ENGINE ONLY)
- (P) ENGINE OIL FILLER
- (Q) DEEP OIL PAN, MAX TILT 10° BACKWARDS
- (Q1) SHALLOW OIL PAN (OPTION), MAX TILT 5° BACKWARDS
- (R) OIL DRAIN HOSE CONNECTION Ø18 MM
- (S) OIL DRAIN HOSE CONNECTION TO REVERSE GEAR Ø20 MM
- (T) OIL/WATER DRAIN CRANK CASE VENTILATION
- (U) EXHAUST ELBOW 90° OR STRAIGHT (OPTION)
- (V) INDICATOR AIR FILTER
- (W) SPEED CABLE CONNECTION 33-CABLE
- (X) FRESH WATER INLET Ø50 MM, KEEL COOLED ENGINE
- (Y) FRESH WATER OUTLET Ø50 MM, KEEL COOLED ENGINE
- (Z) KEEL COOLED OUTLET, CHARGED AIR CIRCUIT Ø40 MM
- (Ä) OUTLET PLUG FOR CABIN HEATER **MAX FLOW 18L/min [2]**
- (Ä) INLET PLUG FOR CABIN HEATER

DRY MASS APPROX. 580 KG

CONSEQUENCE CLASS [4] APPLIES TO PROPERTIES NOT MARKED

CENTRE OF GRAVITY

KEEL COOLING, SEE DRAWING 3590989

SCALE 1:5

SYMBOLS, DESIGNATIONS AND GENERAL DRAWING METHODS STD 5425.501

The copying, distribution and utilization of this document as well as the communication of its contents to others without expressed authorization is prohibited. Offenders are liable to the payment of damages. All rights are reserved in the event of the grant of a patent, utility model or ornamental design registration.

Document title: DIMENSION DRAWING D5A-TA, HE + KC VERSION

Document type

Owner domain Document prefix

VOLVO PENTA

Document No: 3590788 | Title index: 03 | Sheet No: 1(1)