Location	Change description		P/A: . Modified:	Document release status:
	A:Added B:Moved C:Deleted	D:Modified	D: 1 . 1 Modified: NO	RELEASED
				Date / Modification count

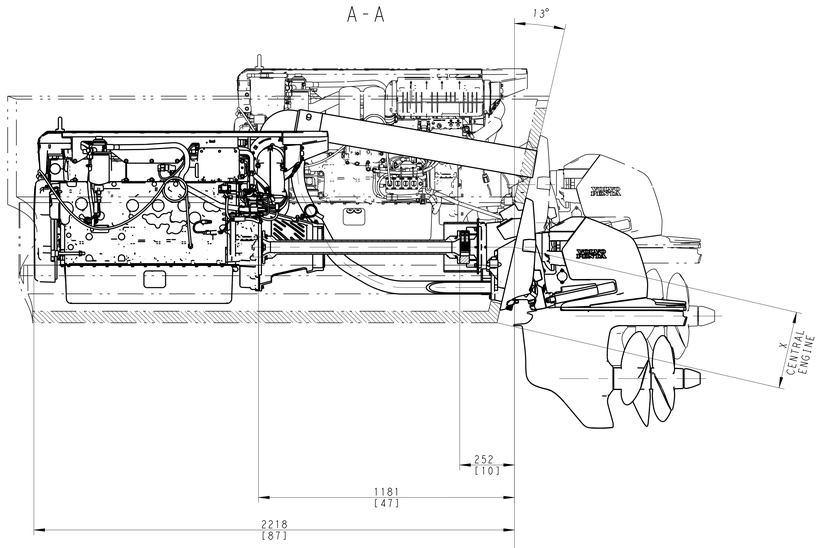

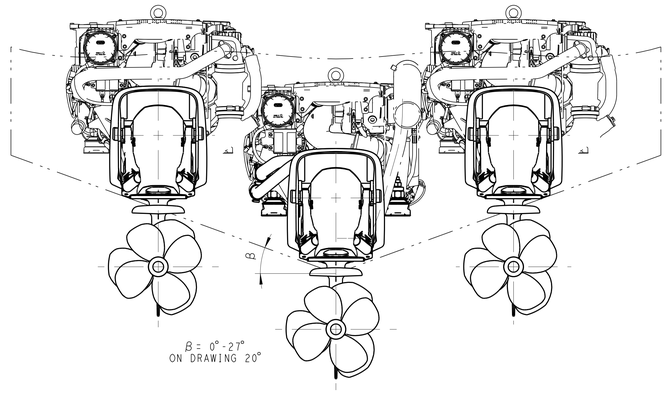

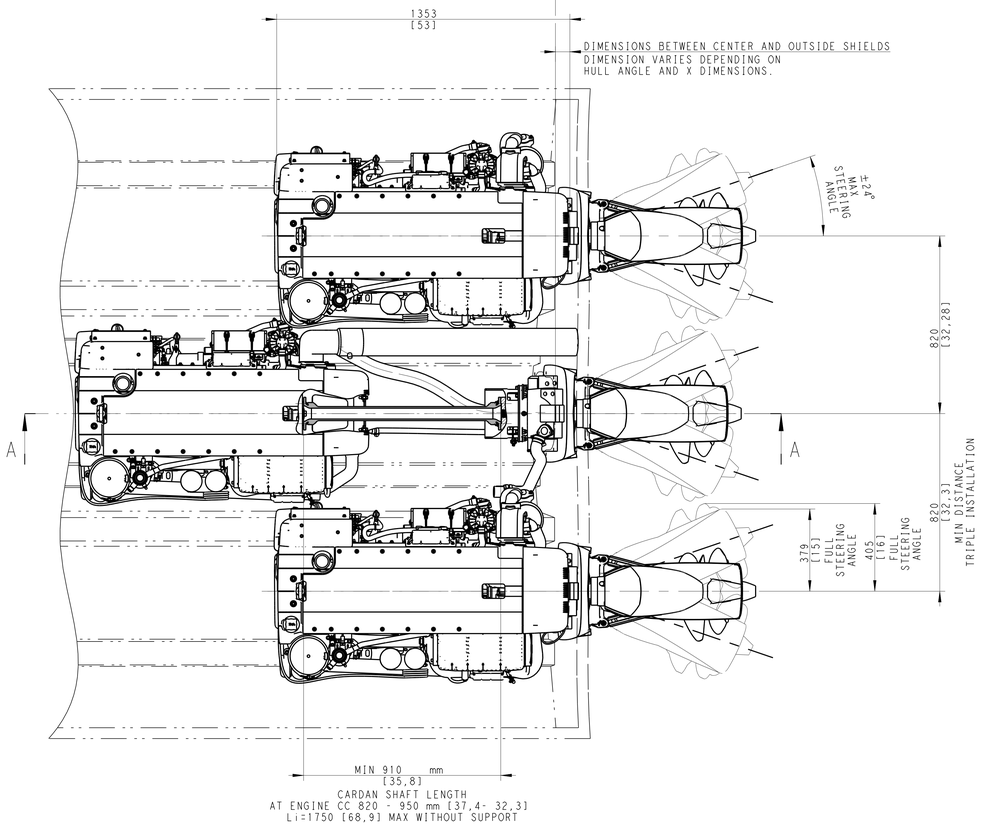

X = INSTALLATION DIMENSION.
REFER TO DPI TRANSOM TEMPLATE.

FOR OTHER INSTALLATION DIMENSIONS
AND ENGINE CC OVER 950 mm SEE
INSTALLATION DRAWING DPI, D4 & D6.

FOR ENGINE RELATED INFORMATION, SEE
ENGINE INSTALLATION DRAWING

SCALE 1:10

SYMBOLS, DESIGNATIONS AND GENERAL DRAWING METHODS STD 101-0005

The copying, distribution and utilization of this document as well as the communication of its contents to others without expressed authorization is prohibited. Offenders will be held liable for payment of damages. All rights reserved in the event of the grant of a patent, utility model or ornamental design registration.

Document title
INSTALLATION DRAWING
DPI, D6 TRIPPEL

Document type

Owner domain:Document prefix

VOLVO PENTA

Document No	Issue index	Sheet No
24075129	01	1(1)

SIZE A1