Engineering Release Notice (ENR)	Location	Change description Added Disbelted	WtNo:	P/A: . Modified: D: 1 . 6 Modified: NO	Document release status: RELEASED
					Date / Modification count

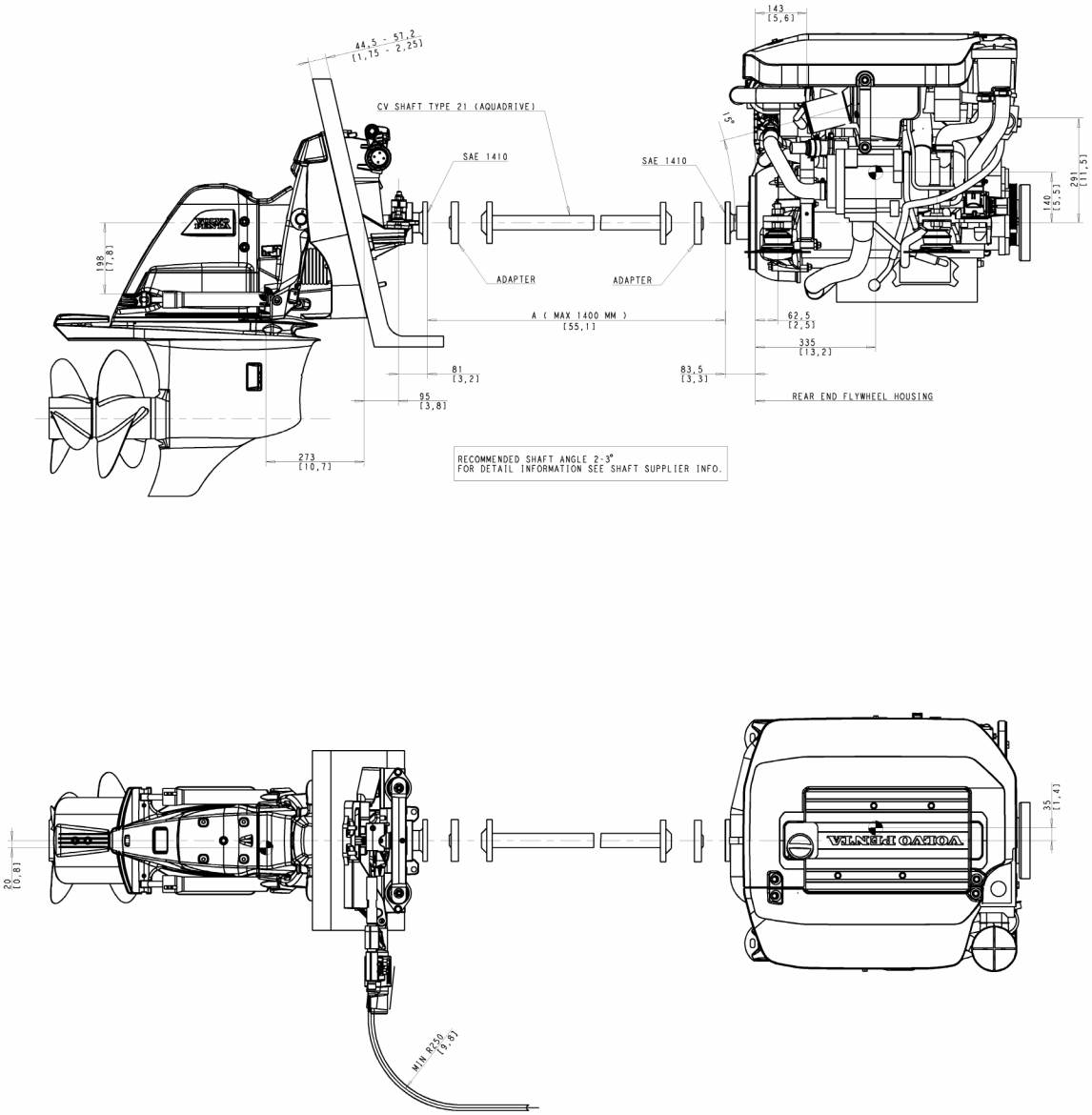

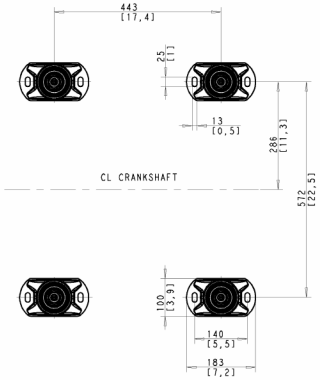

FOR DETAIL INFORMATION
SEE D3 AQUAMATIC
INSTALLATION DRAWING
AND ASSEMBLY INSTRUCTIONS

CENTRE OF GRAVITY

SCALE 1:5

The copying, distribution and utilization of this document as well as the communication of its contents to others without expressed authorization is prohibited. Offenders will be held liable for payment of damages. All rights reserved in the event of the grant of a patent, utility model or ornamental design registration.

VOLVO PENTA

SYMBOLS, DESIGNATIONS AND GENERAL DRAWING METHODS STD 101-0005

Document title
INSTALLATION DRAWING
D3-JACKSHAFT
-

Document type
INSTALLATION DRAWING

Owner domain/Document prefix

Document No	Issue index	Sheet No
21687611	01	1(1)

SIZE A4