Engineering Release Notice (ERN)	Location	Change description		P/A: . Modified: D: 1 . 2 Modified: NO	Document release status: **RELEASED**
		Added Deleted	Mod		Date / Modification count

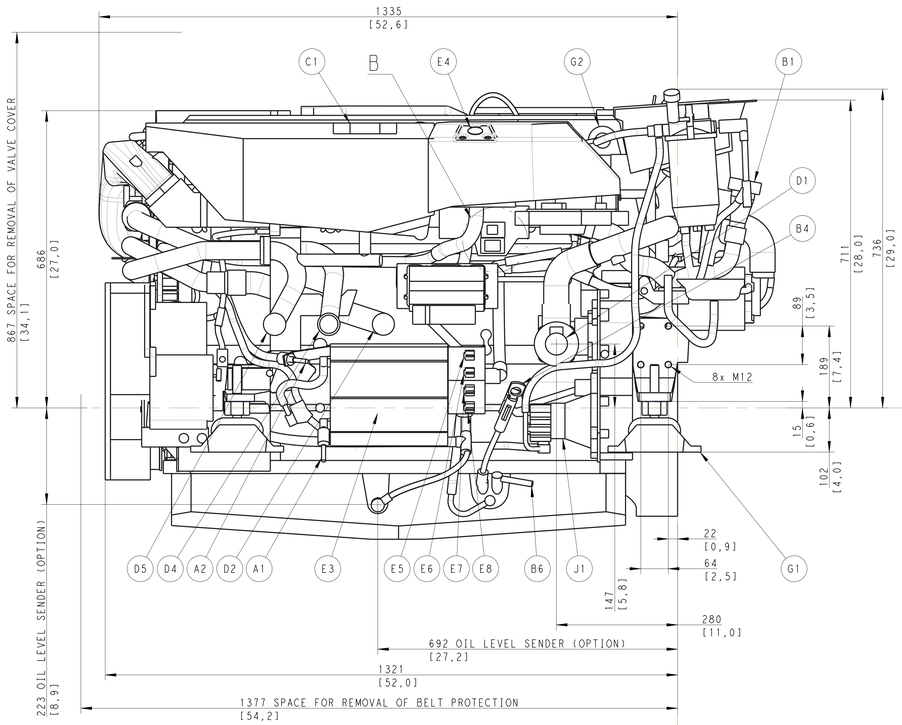

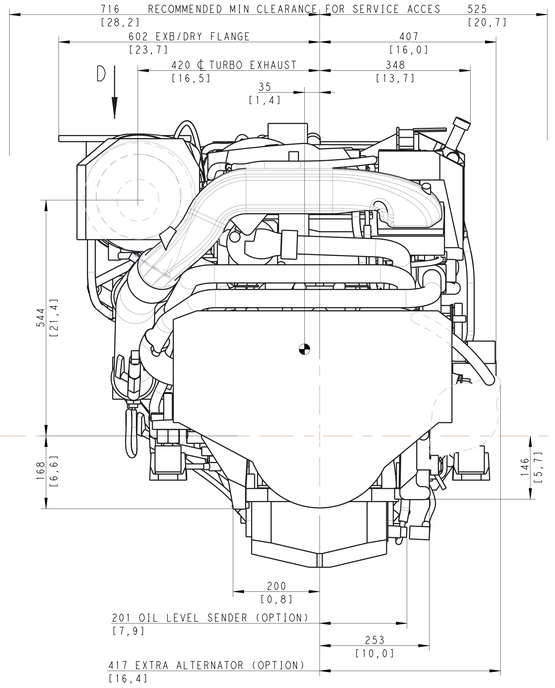

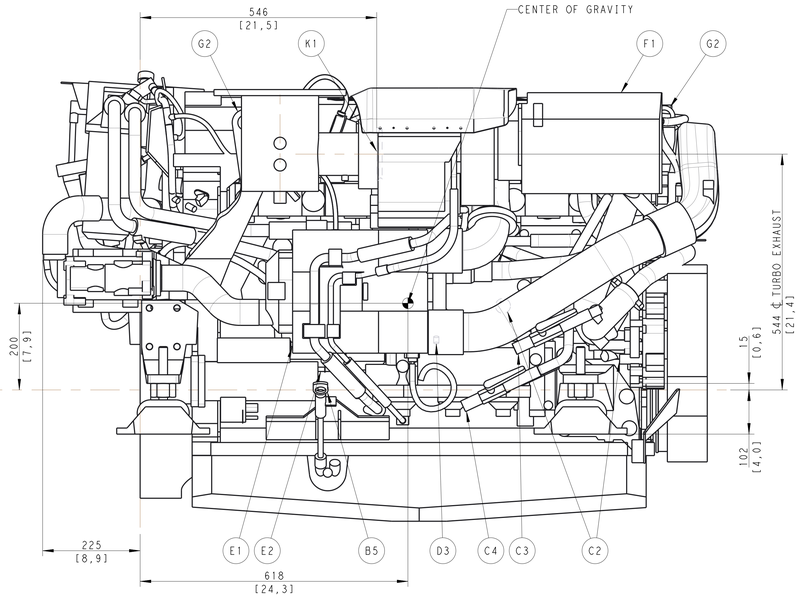

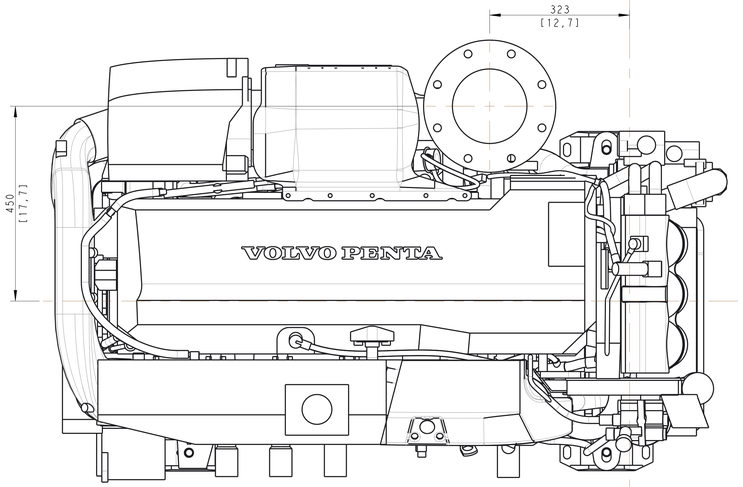

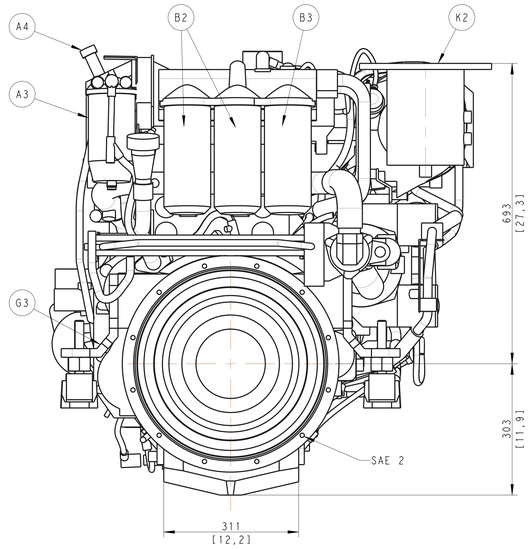

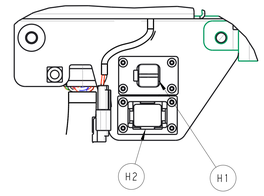

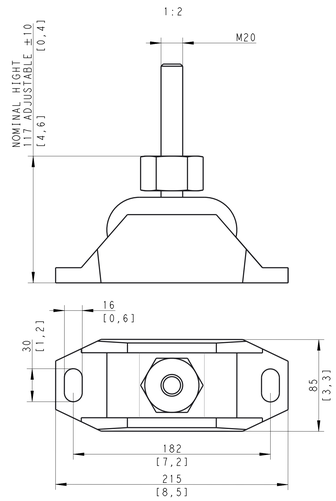

A1.1	FUEL CONNECTION INLET (NIPPLE FOR HOSE ID 10MM) ALT A1.2
A1.2	550MM HOSE WITH SPHERICAL FITTING,ACC TO DIN 3863 (M18x1.5)
A2.1	FUEL CONNECTION OUTLET (NIPPLE FOR HOSE ID 10MM) ALT A2.2.
A2.2	550MM HOSE WITH SPHERICAL FITTING,ACC TO DIN 3863 (M18x1.5)
A3	FUEL FILTER
A4	PRIMER PUMP
B1	OIL FILLER ENGINE
B2	OIL FILTER (2x)
B3	BYPASS OIL FILTER
B4	OIL DIPSTICK ENGINE (OPTION)
B5	OIL DIPSTICK ENGINE (OPTION)
B6	OUTLET FOR OIL BILGE PUMP .12mm / 1/2 ID . HOSE PORT ALT.STARBOARD
C1	FRESH WATER FILLER
C2	FRESH WATER DRAIN POINT (2x)
C3	CONNECTION HOT WATER INLET R 1/2" (OPTION)
C4	CONNECTION HOT WATER OUTLET R 1/2" (OPTION)
D1	WATER INLET PUMP (TO CHARGE AIR COOLER) LT-CIRCUIT Ø 50mm / 1,97" O.D PIPE
D2	FROM ENGINE CHARGE AIR COOLER, LT CIRCUIT Ø50mm / 1,97" O.D PIPE
D3	LT WATER DRAIN POINT
D4	FROM ENGINE COOLANT, HT-CIRCUIT Ø50mm / 1,97" O.D PIPE
D5	TO ENGINE COOLANT, HT-CIRCUIT Ø50mm / 1,97" O.D PIPE
E1	CONNECTION BATTERY POS. +
E2	CONNECTION BATTERY NEG. -
E3	ECU CONTROL UNIT
E4	AUXILIARY STOP
E5	DATALINK
E6	SENDERS
E7	AUX
E8	AUX
F1	AIR FILTER
G1	ELASTIC SUSPENSION (4x) (OPTION)
G2	LIFTING EYE (3x)
G3	ENGINE ANCHORAGE (2x) (OPTION)
H1	DIAGNOSE
H2	CONNECTION EVC SYSTEM
J1	POWER STEERING PUMP (OPTION)
K1	TURBO FLANGE
K2	EXHAUST DRY FLANGE DETAILS (LOOSE EQUIPMENT)

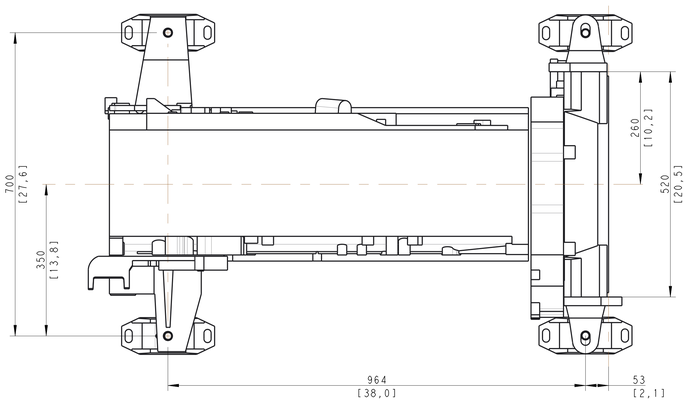

TURBO EXHAUST FLANGE DETAILS
(DIMENSIONS FROM TURBO DRAWING)

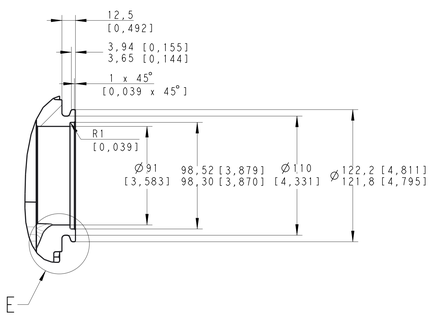

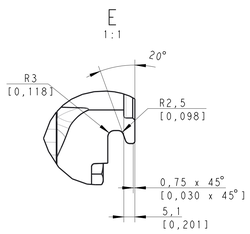

EXHAUST / DRY FLANGE DETAILS (EQUIPMENT)

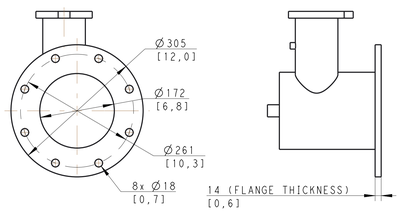

ALL EQUIPMENT ON THE DRAWING
IS NOT STANDARD

FOR WEIGHT AND VOLUMES SEE
TECHNICAL DATA SALES GUIDE

SCALE 1:5

SYMBOLS, DESIGNATIONS AND GENERAL DRAWING METHODS STD 100-0005

The copying, distribution and utilization of this document as well as communication of its contents to others without expressed authorization is prohibited. Offenders will be held liable for payment of damages. All rights reserved in the event of the grant of a patent, utility model or ornamental design registration.

VOLVO PENTA

Document title
ENGINE DIMENSIONS
D11 MARINE RG BOBTAIL KC

Document type
DIMENSION DRAWING

Owner domain:Document prefix

Document No	Issue index	Sheet No	Sheet qty
23311367	01	1(1)	

SIZE A4